RoHS Compliant

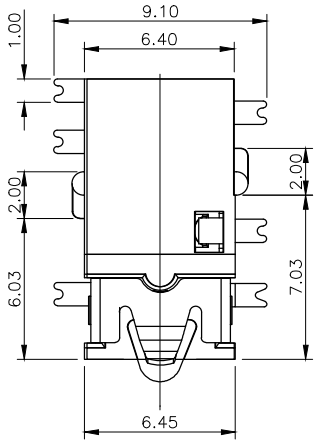

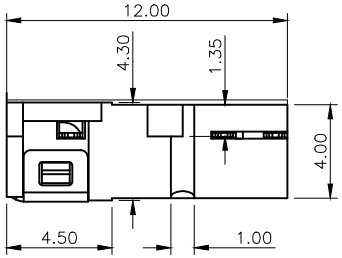

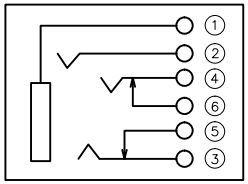

SCHEMATIC

NOTES:

1. REQUEST OF THE SPECIFICATION:
   - 1.1 CONTACT CURRENT RATING: 1A.;
   - 1.2 CONTACT RESISTANCE: 100 mΩ MAX.;
   - 1.3 INSULATION RESISTANCE: 100MΩ MIN.;
   - 1.4 DIELECTRIC WITHSTANDING: 500V AC MIN.;
   - 1.5 DURABILITY: 5,000 CYCLES MIN.;
   - 1.6 CONNECTOR MATING FORCES: 29.8N (3.00Kgf) MAX.;
   - 1.7 CONNECTOR UNMATING FORCES: 2.98N(0.30Kgf) MIN.;

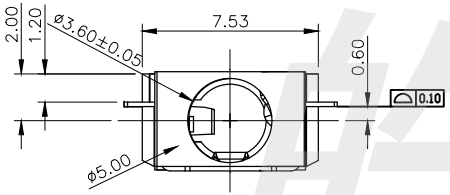

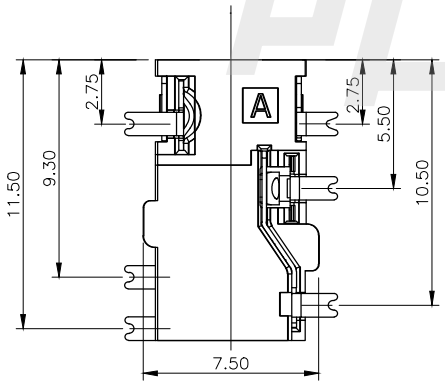

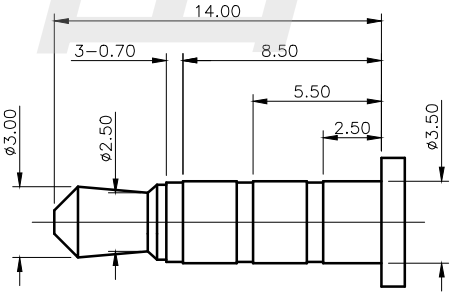

(ø3.50mm 4 POLE PLUG DETAIL DRAWING)

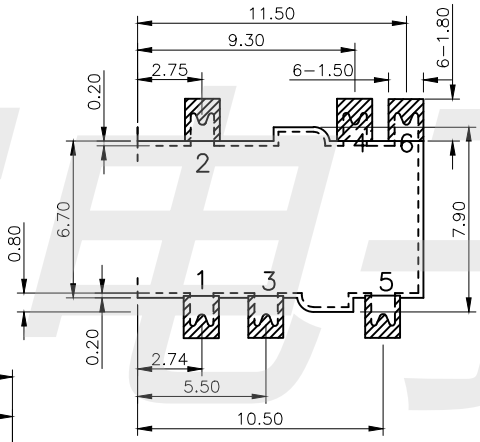

正贴 P.C.B LAYOUT TOP VIEW

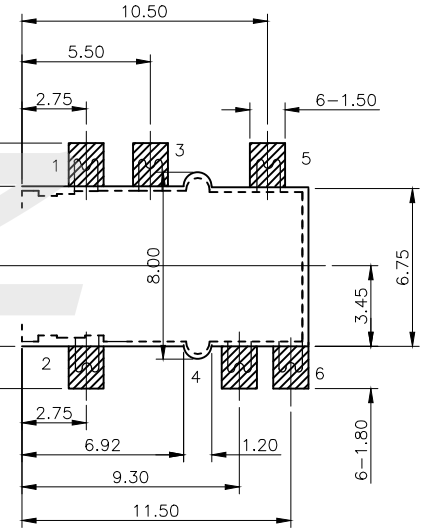

P.C.B LAYOUT TOP VIEW 反贴

ITEM	NAME	Q'TY	DESCRIPTION	NOTE
7	TERMINAL 6#	1	PHOSPHOR BRONZE; NICKEL(40u"MIN.) UNDER PLATING OVERALL,GOLD FLASH ON SOLDER AREA	T=0.20
6	TERMINAL 5#	1	PHOSPHOR BRONZE; NICKEL(40u"MIN.) UNDER PLATING OVERALL,GOLD FLASH ON SOLDER AREA	T=0.20
5	TERMINAL 4#	1	SUS304; THE BOTTOM OF THE NICKEL(40u"MIN.); THE WHOLE GOLD FLASH PLATING.	T=0.20
4	TERMINAL 3#	1	SUS304; NICKEL(40u"MIN.) UNDER PLATING OVERALL,GOLD FLASH ON SOLDER AREA ;GOLD FLASH ON CONTACT AREA	T=0.20
3	TERMINAL 2#	1	PHOSPHOR BRONZE; NICKEL(40u"MIN.) UNDER PLATING OVERALL,GOLD FLASH ON SOLDER AREA ;GOLD FLASH ON CONTACT AREA	T=0.20
2	TERMINAL 1#	1	SUS304; THE BOTTOM OF THE NICKEL(40u"MIN.); THE WHOLE GOLD FLASH PLATING.	T=0.20
1	HOUSING	1	PPA COLOR BLACK	

HAOFU ELECTRIONCS TECHNOLOGY CO.,LTD

COPYRIGHT RESERVED,PLEASE DO NOT COPY.

PART NAME	PHONE JACK (SMD)	DRAWING	Y.C.Zhang	DWG.No.	
PART NO.	PJ-399E-W	CHECK	G.C.Chen	REV.	A1
UNIT : mm	TOLERANCE OTHERWISE: UP TO 5 ±0.2; ABOVE 5 ~30 ±0.3; ABOVE 30 ±0.5; ANGLE ±3°	ANGLE 0°±3°	APPROVAL	DATE	
			SCALE 4:1	PAGE	1 OF 1