RoHS Compliant

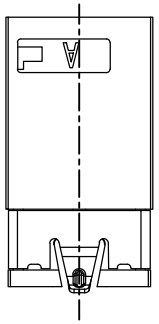

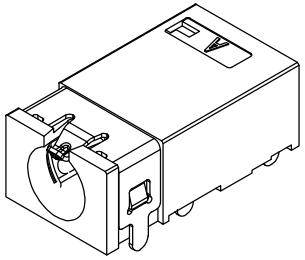

3D VIEW

1. CONTACT CURRENT RATING: 1A.
2. CONTACT RESISTANCE: 50 mΩ MAX.;
3. INSULATION RESISTANCE: 1000Ω MIN.;
4. DIELECTRIC WITHSTANDING: 500V AC MIN.;
5. DURABILITY: 5,000 CYCLES MIN.;
6. CONNECTOR MATING FORCES: 30N MAX.;
7. CONNECTOR UNMATING FORCES: 3N MIN.;

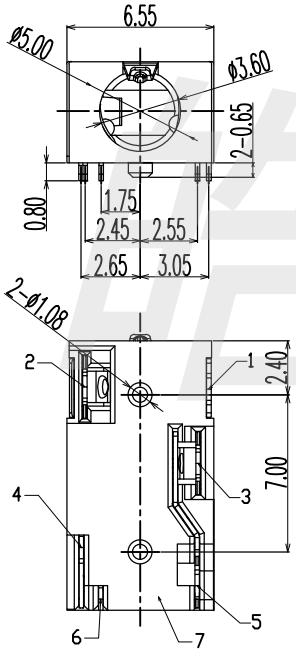

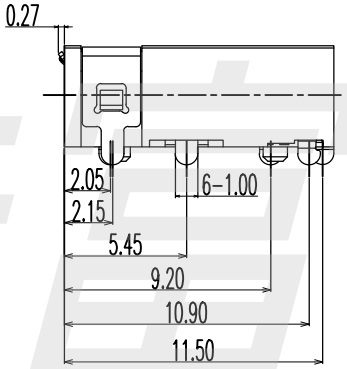

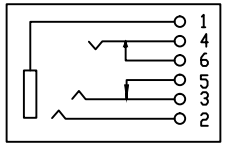

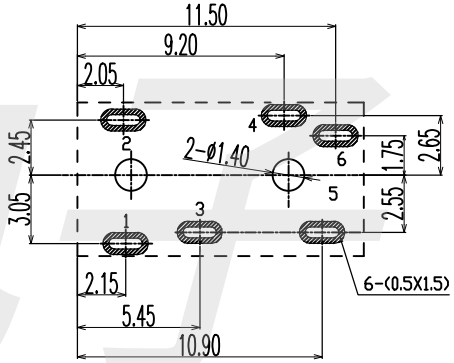

P.C.B LAYOU
TOP VIEW

ITEM	NAME	Q'TY	DESCRIPTION	NOTE
7	HOUSING	1	PPA COLOR BLACK	
6	TERMINAL 6#	1	BRASS; NICKEL(40u"MIN.) UNDER PLATING OVERALL,GOLD FLASH PLATING ON SOLDER AREA	T=0.20mm
5	TERMINAL 5#	1	BRASS; NICKEL(40u"MIN.) UNDER PLATING OVERALL,GOLD FLASH PLATING ON SOLDER AREA	T=0.20mm
4	TERMINAL 4#	1	STAIMLESS STEEL; NICKEL(40u"MIN.)UNDER PLATING OVERALL,GOLD FLASH PLATING ON SOLDER AREA ;GOLD FLASH PLATING ON CONTACT AREA	T=0.20mm
3	TERMINAL 3#	1	PHOSPHOR BRONZE; NICKEL(40u"MIN.)UNDER PLATING OVERALL,GOLD FLASH PLATING ON SOLDER AREA ;GOLD FLASH PLATING ON CONTACT AREA	T=0.20mm
2	TERMINAL 2#	1		T=0.20mm
1	TERMINAL 1#	1	PHOSPHOR BRONZE; NICKEL(40u"MIN.) UNDER PLATING OVERALL,GOLD FLASH PLATING OVERALL;	T=0.20mm

HAOFU ELECTRIONCS TECHNOLOGY CO.,LTD

COPYRIGHT RESERVED,PLEASE DO NOT COPY.

PART NAME	PHONE JACK			DRAWING	Y,C,ZHANG	DWG.No.	SBICL
PART NO.	PJ-31360-P			CHECK	G.C.Chen	REV.	A1
UNIT : mm	TOLERANCE OTHERWISE	UP TO 5 ±0.2 ABOVE 5 ~30 ±0.3 ABOVE 30 ±0.5 ANGLE ±3°	ANGLE 0°±3°	APPROVAL		DATE	
				SCALE	2:1	PAGE	1 OF 1