RoHS Compliant

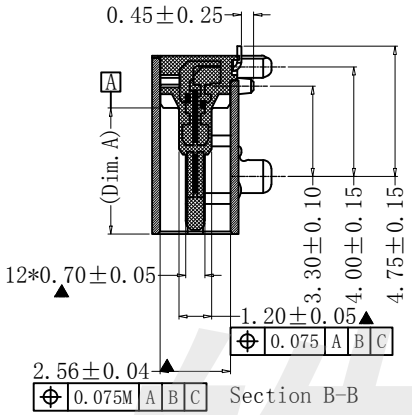

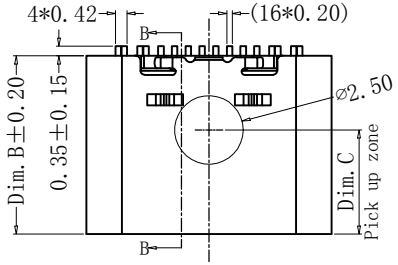

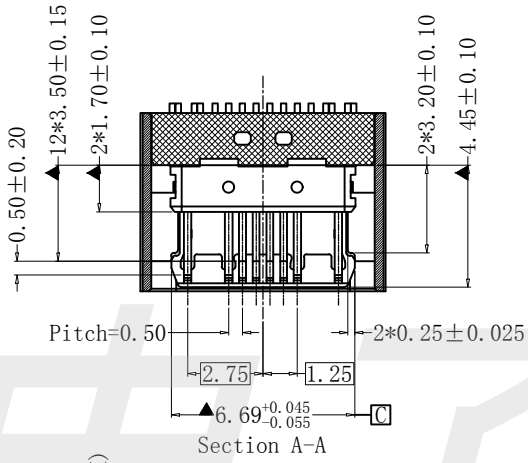

PIN DEFINE TABLE			
PIN	SIGNAL	PIN	SIGNAL
A12	GND	B1	GND
A11		B2	
A10		B3	
A9	VBUS	B4	VBUS
A8	SBU1	B5	CC2
A7	Dn1	B6	Dp2
A6	Dp1	B7	Dn2
A5	CC1	B8	SBU2
A4	VBUS	B9	VBUS
A3		B10	
A2		B11	
A1	GND	B12	GND

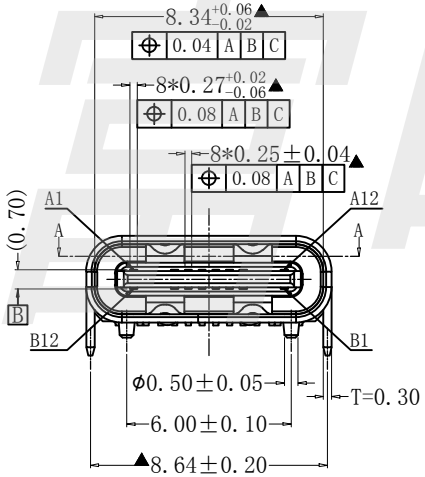

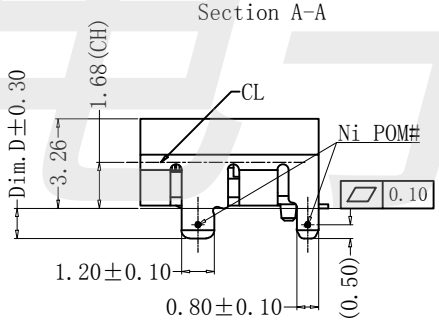

SPECIFICATION:

1. Material & Finish:See the list;
2. Mechanical:
   - 2.1.Mating force:5-20Nf;
   - 2.2.Unmating force:Initial:8-20Nf;Final:6-20Nf;
   - 2.3.Durability:10000 Cycles;
3. Electrical:
   - 3.1.Current Rating:
     VBus Pins:5A, Vconn Pin:1.25A, Other Pins:0.25A;
   - 3.2.Voltage Rating:20V Max.;
   - 3.3.Dielectric Withstanding volage:100Vac,60S,10mA;
   - 3.4.Contact resistance:40m Ohms Max.;
   - 3.5.Insulation Resistance:100M Ohms Min.;
4. Environmental:
   - 4.1.Operating temperature:-40° C~+85° C;
   - 4.2.Salt Spray Test:48H Min.(No oxidation or rust);
   - 4.3.Wetting Temperature:265±5° C,5±0.5s

NO.	Items	L6.5(mm)	L6.8(mm)
1	Dim.A	4.60	4.90
2	Dim.B	6.50	6.80
3	Dim.C	3.80	4.10
4	Dim.D	0.8/1.1	0.8/1.1

NO.	PART NAME	Q'TY	MATERIAL	FINISH
5	Shell	1	SUS304-1/2H,T=0.30mm	50u"Ni Min.
4	GroundBar	1	SUS301-1/2H,T=0.15mm	No Plating
3	Down Contact	8	C7025 TM04,T=0.15mm	Au/50u"Ni Min.
2	Top Contact	8	C7025 TM04,T=0.15mm	Au/50u"Ni Min.
1	Housing	1	LCP or PA	UL 94 V-0

HAOFU ELECTRIONCS TECHNOLOGY CO.,LTD

COPYRIGHT RESERVED,PLEASE DO NOT COPY.

PART NAME	CONNECTOR	DRAWING	Y,C,ZHANG	DWG.No.	SBICL
PART NO.	Type-C Rec.16Pin 3M板上短体L6.5SMT	CHECK	G.C.Chen	REV.	A1
UNIT : mm	TOLERANCE OTHERWISE: UP TO 5 ±0.2; ABOVE 5~30 ±0.3; ABOVE 30 ±0.5; ANGLE ±3°; ANGLE 0°±3°	APPROVAL		DATE	
		SCALE	2:1	PAGE	1 OF 1