RoHS Compliant
Halogen Free

SYMBOL	REV.	REVISION	APPROVAL	DATE

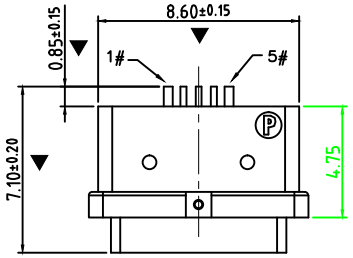

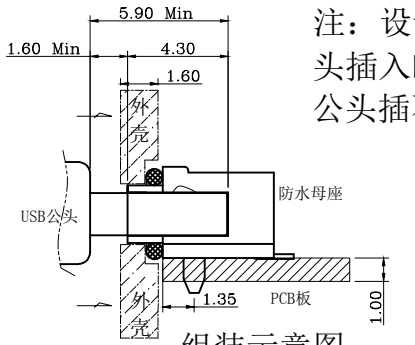

组装示意图

注：设计时，请注意公头插入时的距离，防止公头插不到底。

SPECIFICATIONS:
1. ELECTRICAL CHARACTERISTICS:
   1.1. RATING: 3A(PIN1&5),0.5A(PIN2&3&4);
   1.2. CONTACT RESISTANCE: 30 mΩ MAX.(INITIAL);
   1.3. DIELECTRIC WITHSTANDING: 500V AC MIN.;
   1.4. INSULATION RESISTANCE: 1000MΩ MIN.;
2. DURABILITY: 5,000 CYCLES MIN.;
3. INSERTION FORCE: 3.5Kgf (35N) Max.;
4. EXTRACTION FORCE: 0.8Kgf (8N) Min;
5. WATER PROOFNESS:THIS PRODUCT IS BASED ON IPX6.
6. PLUG INTERFACE DIMENSIONS COMFORM TO USB2.0 SPEC.
7. PACKAGING: TAPE & REEL.
8. Waterproof grade: IPX6

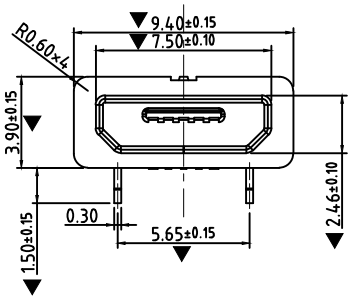

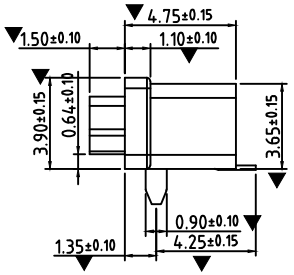

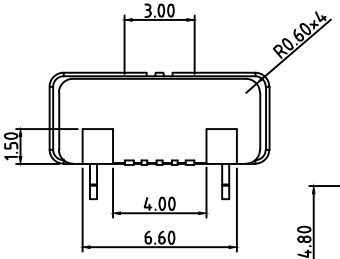

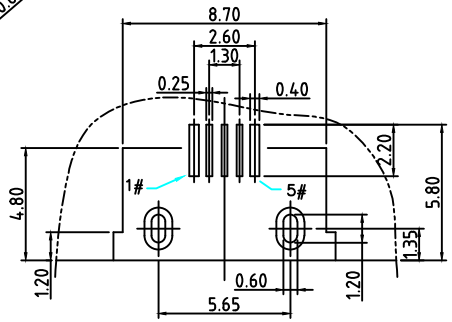

P.C.B LAYOUT

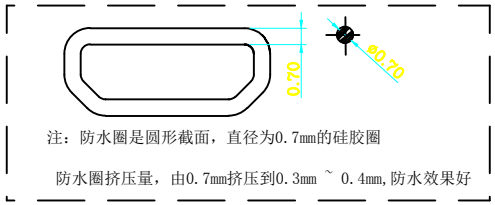

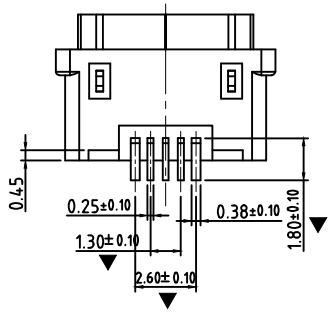

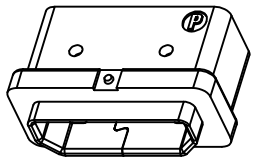

Contact Number	Signal Name	Remarks
1#	VBUS	Power
2#	D−	Date−
3#	D+	Date+
4#	ID	Reserve or Gound
5#	GND	Gound

ITEM	PART NAME	Q'TY	FINISH	NOTE
3	Shell	1	SUS304R−1/2H Ni PlatingT=0.30mm	
2	Contact	5	Phosphor bronze C5191R−EH Au/Ni Plating T=0.20mm	
1	Housing	1	PA9T&LCP (G.F30%)	

CIKI 东莞市皓富电子科技有限公司
DONGGUAN CITY HAOFU ELECTRIONCS TECHNOLOGY CO.,LTD

COPYRIGHT RESERVED,PLEASE DO NOT COPY.

PART NAME	CONNECTOR			DRAWING	Z.L.Liang	DWG.No.	
PART NO.	Micro USB 5Pin SMT B Type 贴板平口防水长头7.1mm			CHECK	G.C.Chen	REV.	A0
UNIT: mm	TOLERANCE UNLESS OTHERWISE SPECIFIED	X.X ± 0.3 X.XX ± 0.2 X.XXX ± 0.1	ANGLE ±2°	APPROVAL	G.C.Chen	DATE	
				SCALE	1:1	PAGE	1 OF 1