SYMBOL	REV.	REVISION	APPROVAL	DATE

RoHS Compliant
Halogen Free

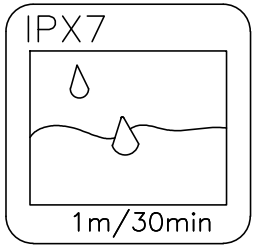

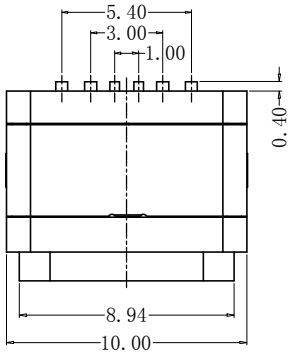

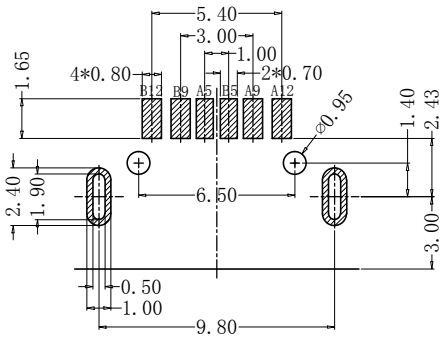

RECOMMENDED P.C.B. LAYOUT (T:1.0~1.2mm)

TOLERANCE UNSPECIFIED ±0.05mm

SPECIFICATION:
1.Material:
HOUSING&MOLDING:
HIGH TEMPERATURE RESISTANT PLASTIC, UL94 V-0
CONTACTS:COPPER ALLOY T=0.15mm
IDDLE CLIP:SUS301-1/2H,T=0.15mm
SHELL-1:SUS304, T=0.30mm
SHELL-2:SUS304, T=0.20mm
2.Mechanical:
2.1.Mating force:0.5~2.0kgf.
2.2.UNMATING FORCE:0.8~2.0kgf.
0.6~2.0kgf AFTER DURABILITY TEST;
2.3.Durability:10000 Cycles;
3.Electrical:
3.1.Current Rating:3A Max.;
3.2.Voltage Rating:20V Max.;
3.3.Dielectric Withstanding voltage:100VAc;
3.4.Contact resistance:40m Ohms Max.;
3.5.Insulation Resistance:100M Ohms Min.;
4.Environmental:
4.1.Operating temperature:-40°C~+85°C;
4.2.Wetting Temperature:265±5°C,5±0.5s
4.3.Only one use through IR

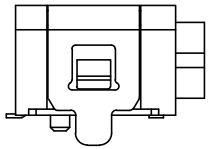

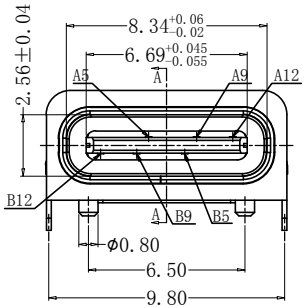

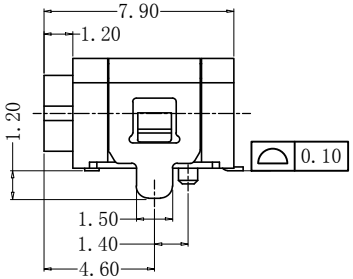

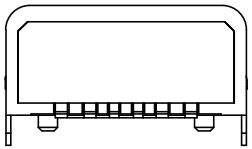

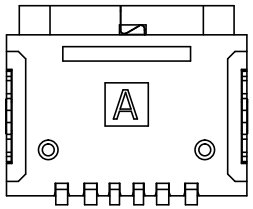

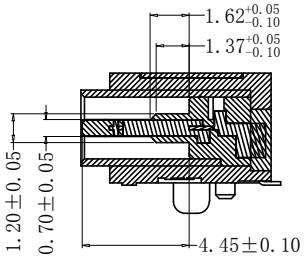

SECTION A-A

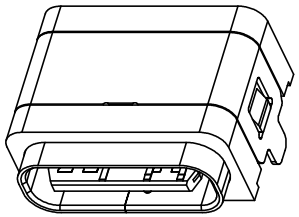

A5	CC1	B5	CC2
A9	VBUS	B9	VBUS
A12	GND	B12	GND
PIN	SIGNAL	PIN	SIGNAL

NO.	P/N	FINISH	COLOR
1	1006-FGB152	镀金1u″	LCP Black
2	1006-FGB153	镀金3u″	LCP Black

CIKI 东莞市皓富电子科技有限公司
DONGGUAN CITY HAOFU ELECTRIONCS TECHNOLOGY CO.,LTD

COPYRIGHT RESERVED,PLEASE DO NOT COPY.

PART NAME	TYPE-C CONNECTOR			DRAWING	Z.L.Liang	DWG.No.	
PART NO.	TYPE-C 6pin 防水母座板上型两脚有柱			CHECK	G.C.Chen	REV.	A0
UNIT: mm	TOLERANCE UNLESS OTHERWISE SPECIFIED	X.X ± 0.3 X.XX ± 0.2 X.XXX ± 0.1	ANGLE ±2°	APPROVAL	G.C.Chen	DATE	
				SCALE	1:1	PAGE	1 OF 1