RoHS Compliant

SYMBOL	REV.	REVISION	APPROVAL	DATE

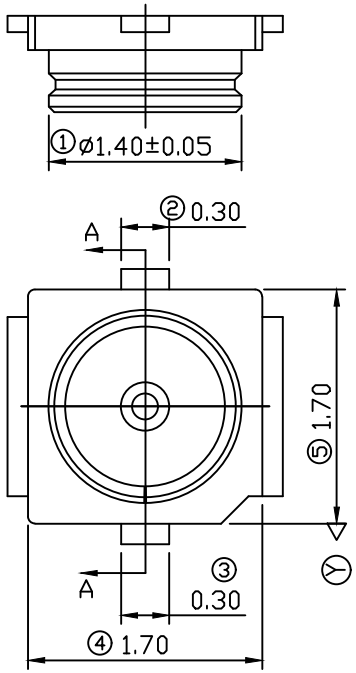

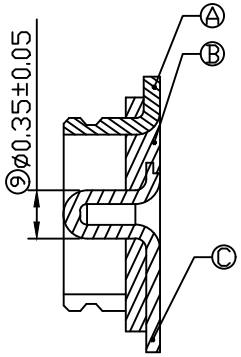

SECTION A-A
SCALE 1:1

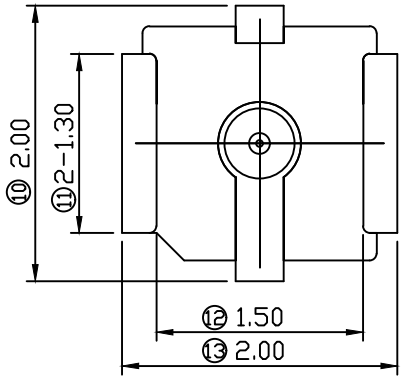

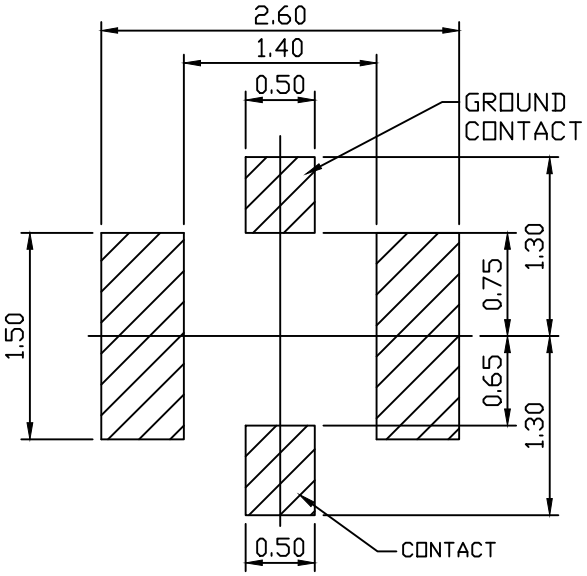

RECOMMENDED P.C.B. LAYOUT
TOP VIEW(TOLERANCE:±0.05)

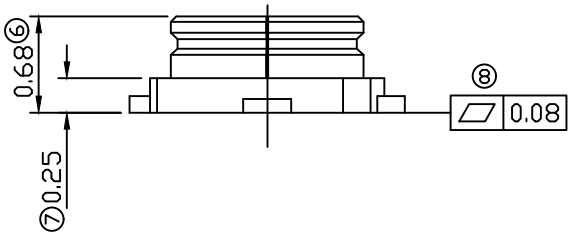

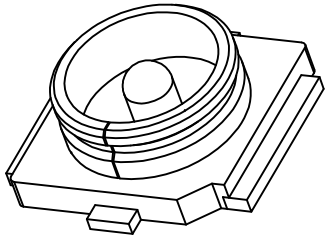

Notes:

1.1	Rated Voltage	60V AC
1.2	Frequency Range	0～6GHz
1.3	Impedance	50Ω
1.4	Operating Temperature	−40℃～+85℃
2.1	Voltage Standing Wave Ratio(VSWR)	
	1.3 max. at 0～3GHz	
		1.4 max. at 3～6GHz
2.2	Durability	30 cycles
3.1	Packing tape & reel	3000Pcs/Reel (ø178mm)

PROD. NO.	ITEM	PART NAME	Q'TY	MATERIAL/FINISH
HF-RF4-15A1	Ⓒ	CONTACT	1	COPPER ALLOY/GOLD PLATED OVER Ni
	Ⓑ	HOUSING	1	HIGHT TEMP. PLASTIC UL94V-0/BLACK
	Ⓐ	SHELL	1	COPPER ALLOY/Ag PLATED OVER Ni

BOM LIST

CIKI 东莞市皓富电子科技有限公司
DONGGUAN HAOFU ELECTRONIC TECHNOLOGY CO.,LTD

COPYRIGHT RESERVED,PLEASE DO NOT COPY.

PART NAME	CONNECTOR			DRAWING	Z.L.Liang	DWG.No.	
PART NO.	HF-RF4-15A1			CHECK	G.C.Chen	REV.	A0
UNIT: mm	TOLERANCE UNLESS OTHERWISE SPECIFIED	X.X ± 0.3 X.XX ± 0.2 X.XXX ± 0.1	ANGLE ±2°	APPROVAL	G.C.Chen	DATE	
				SCALE	1:1	PAGE	1 OF 1